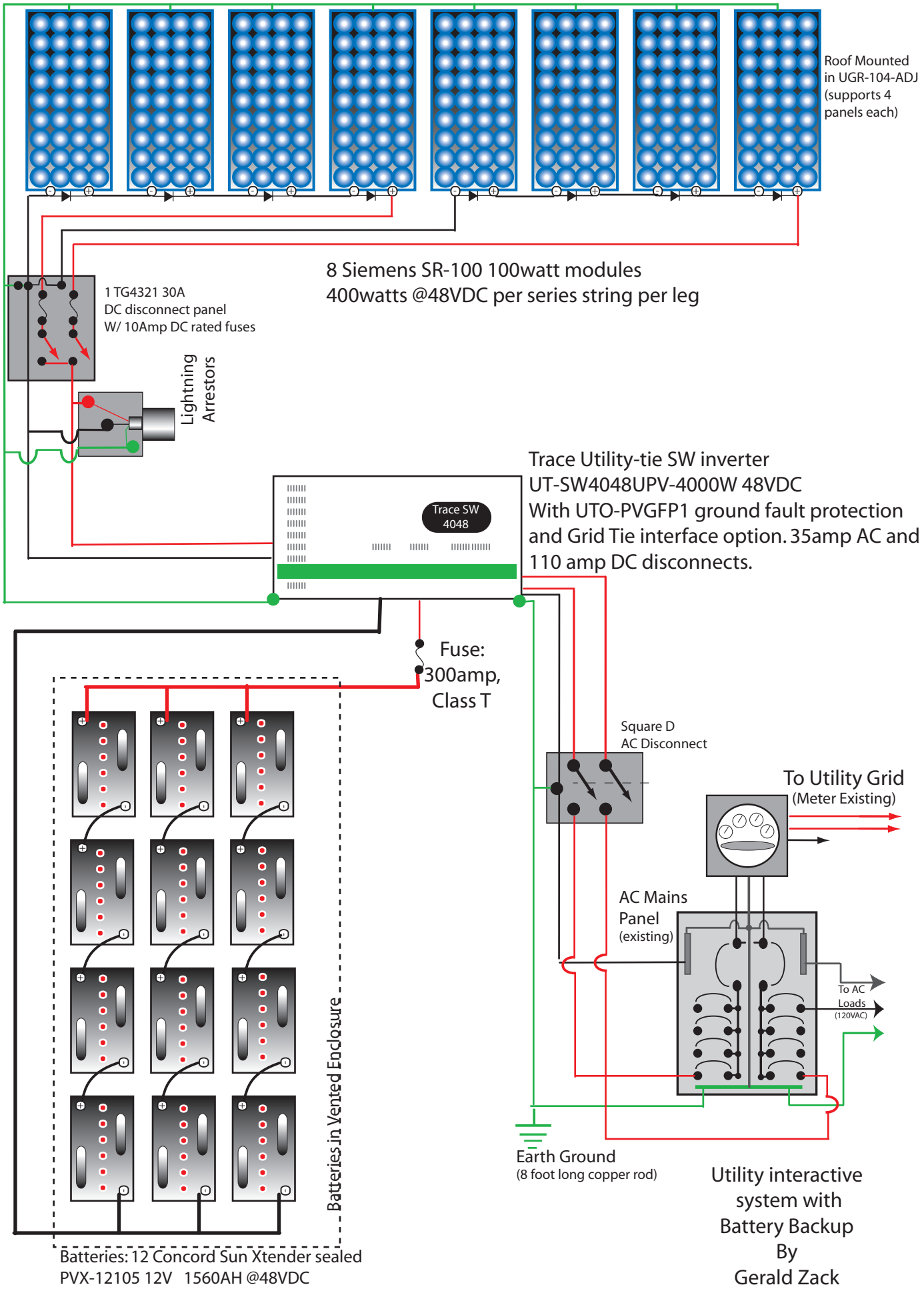
Roof Mounted
in UGR-104-ADJ
(supports 4
panels each)
8 Siemens SR-100 100watt modules
400watts @48VDC per series string per leg
1 TG4321 30A
DC disconnect panel
W/ 10Amp DC rated fuses
Lightning
Arrestors
Trace Utility-tie SW inverter
UT-SW4048UPV-4000W 48VDC
With UTO-PVGFP1 ground fault protection
and Grid Tie interface option. 35amp AC and
110 amp DC disconnects.
Trace SW
4048
Fuse:
300amp,
Class T
Square D
AC Disconnect
To Utility Grid
(Meter Existing)
AC Mains
Panel
(existing)
To AC
Loads
(120VAC)
Batteries in Vented Enclosure
Earth Ground
(8 foot long copper rod)
Utility interactive
system with
Battery Backup
By
Gerald Zack
Batteries: 12 Concord Sun Xtender sealed
PVX-12105 12V 1560AH @48VDC